1,500 Gallon DEC Septic Tank Configuration

BILL OF MATERIALS		
1	PE1500SE	PolySeptic 1500G 102Lx78Wx77H
2	SF	Sika-Flex
1	UBOLT	3/8" U-Bolt, Tank Lifting Eye
2	FERNCO	Coupling, Septic 5x4.5 for Inlet & Outlet
1	FERNCO4	Coupling, Septic 4x4 for Pump Out
1	JC	Jim Cap, Septic, 4" for Pump Out
12	SCREWS	5/16"x1 1/2" Zinc Plated Screws

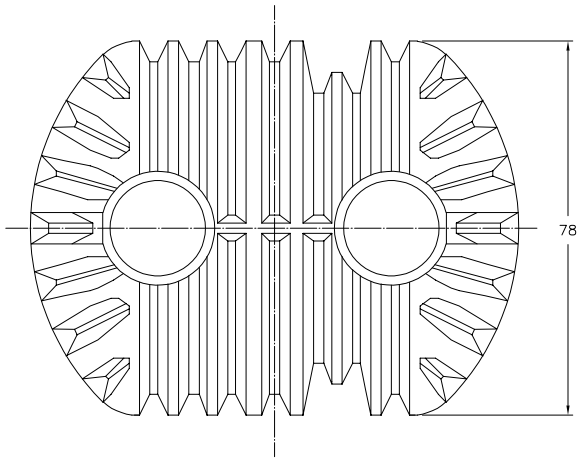

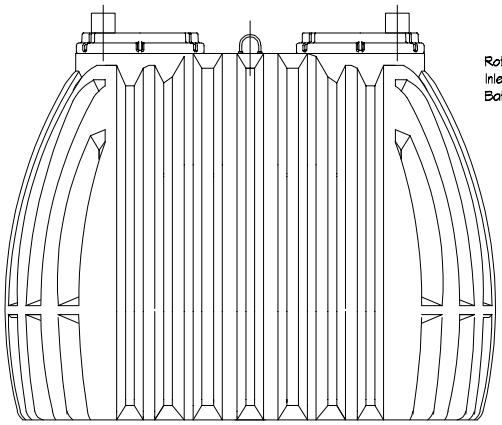

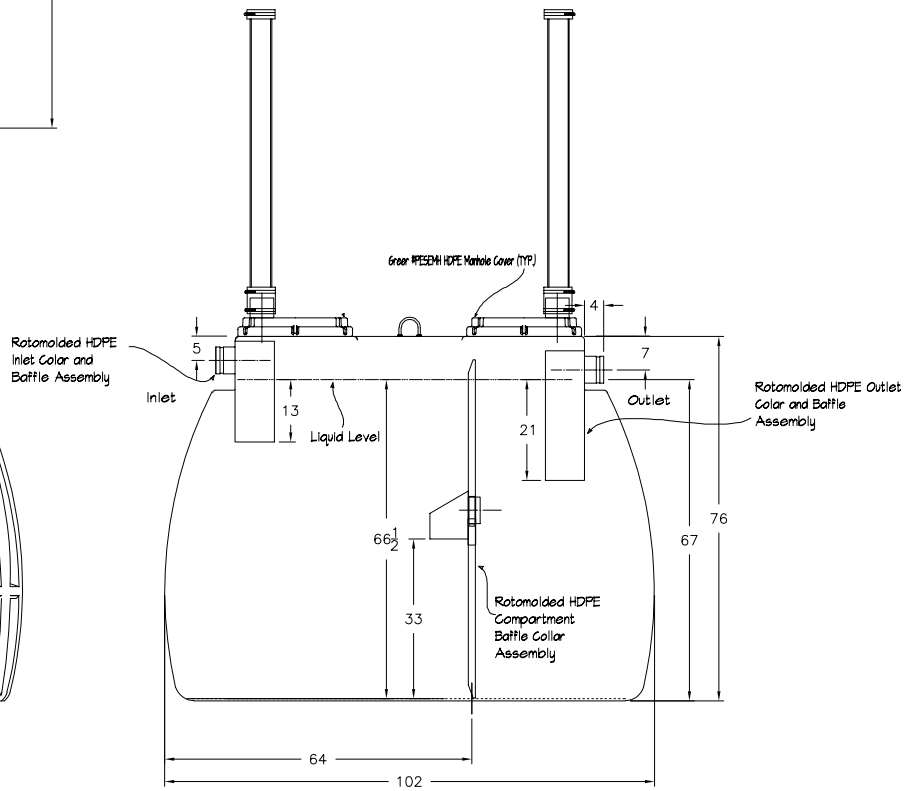

DRAWN:	SIMON
DATE:	10/11/19
REVISED:	9/10/24
FILE NAME:	GPT_SUBMITTAL
JOB NO:	STANDARD
SCALE:	NTS
SHEET No. OF	1 1

1500 GREER POLY TANK SEPTIC
DEC CONFIGURATION

Customer Name
Job Location

ANCHORAGE TANK
2723 RAMPART DRIVE
ANCHORAGE, ALASKA
(907) 272-3543