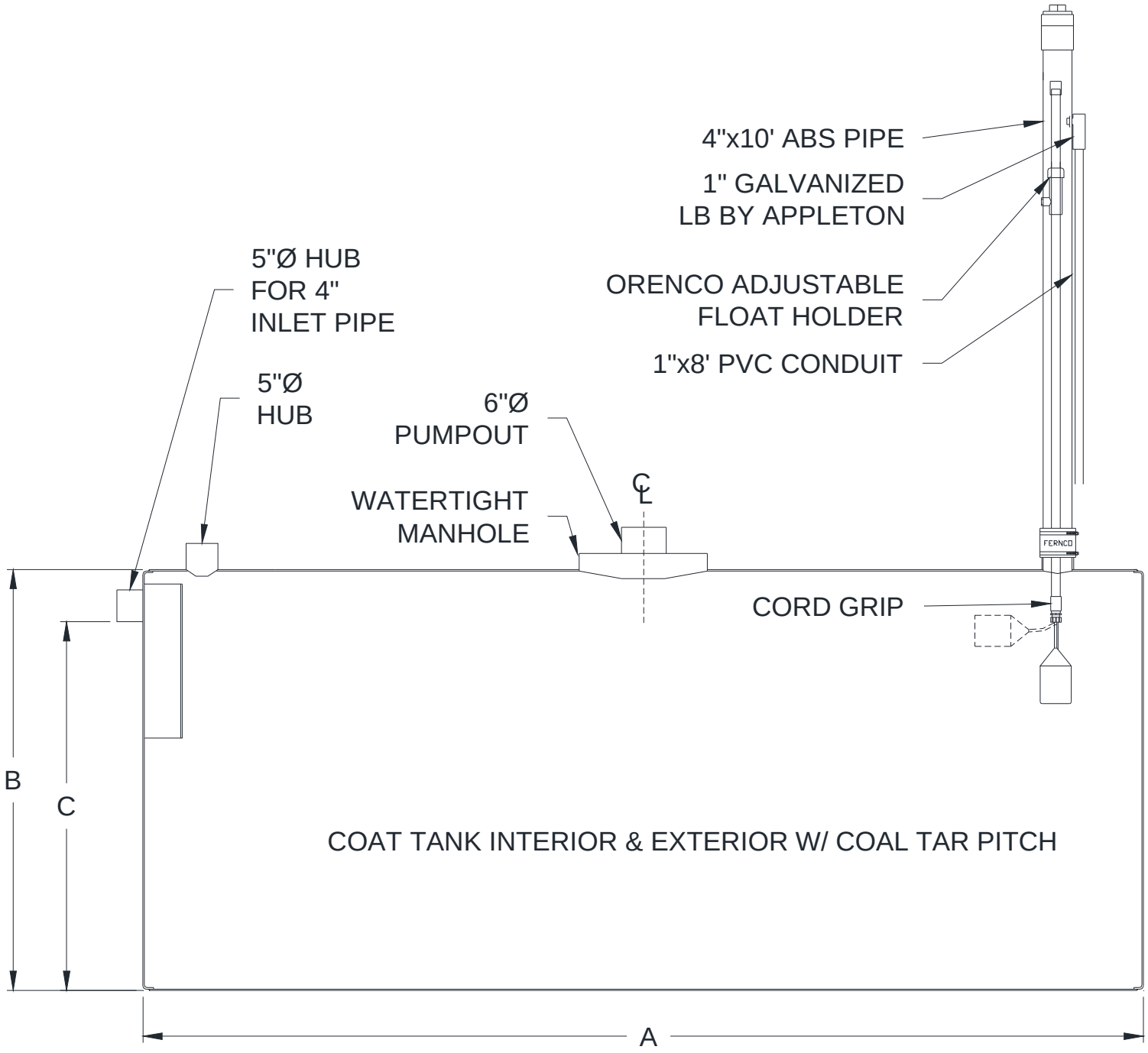
4"x10' ABS PIPE
1" GALVANIZED
LB BY APPLETON
ORENCO ADJUSTABLE
FLOAT HOLDER
1"x8' PVC CONDUIT
5"Ø HUB
FOR 4"
INLET PIPE
5"Ø
HUB
6"Ø
PUMPOUT
WATERTIGHT
MANHOLE
CL
FERNCO
CORD GRIP
B
C
COAT TANK INTERIOR & EXTERIOR W/ COAL TAR PITCH
A