Oil Water Separator

Facet International

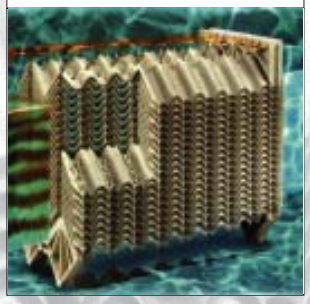

O&M Manual

- Installation
- Operation
- Maintenance

Anchorage Tank & Welding Inc.

Table of Contents

Introduction

Your Anchorage Tank & Welding, Inc. oil water separator is an enhanced gravity passive system for the removal of oil and solids from waste water. Oil droplets, being lighter (lower specific gravity) than water, tend to rise and separate from the waste water. In a similar manner, the higher specific gravity (heavier) solid particles fall to the bottom of the separator.

To enhance this separation, the Anchorage Tank & Welding, Inc. separator utilizes the Facet International MPak® system. The MPak® is an assembly of special patented coalescing plates (U.S. Patent No. 4,897,206) to remove droplets much more efficiently than simple gravity separators. Please note that this system is designed for the removal of free oil from water. It will not, however, remove dissolved hydrocarbons or break emulsifications.

The coalescing plates are made of calcium carbonate-fillet polypropylene, stacked and bound together with sturdy rods and supports into modular plate packs known as MPaks®. MPaks® are available in either 1/4" or 1/2" nominal plate spacing, although 1/2" spacing is preferred in underground separtators..

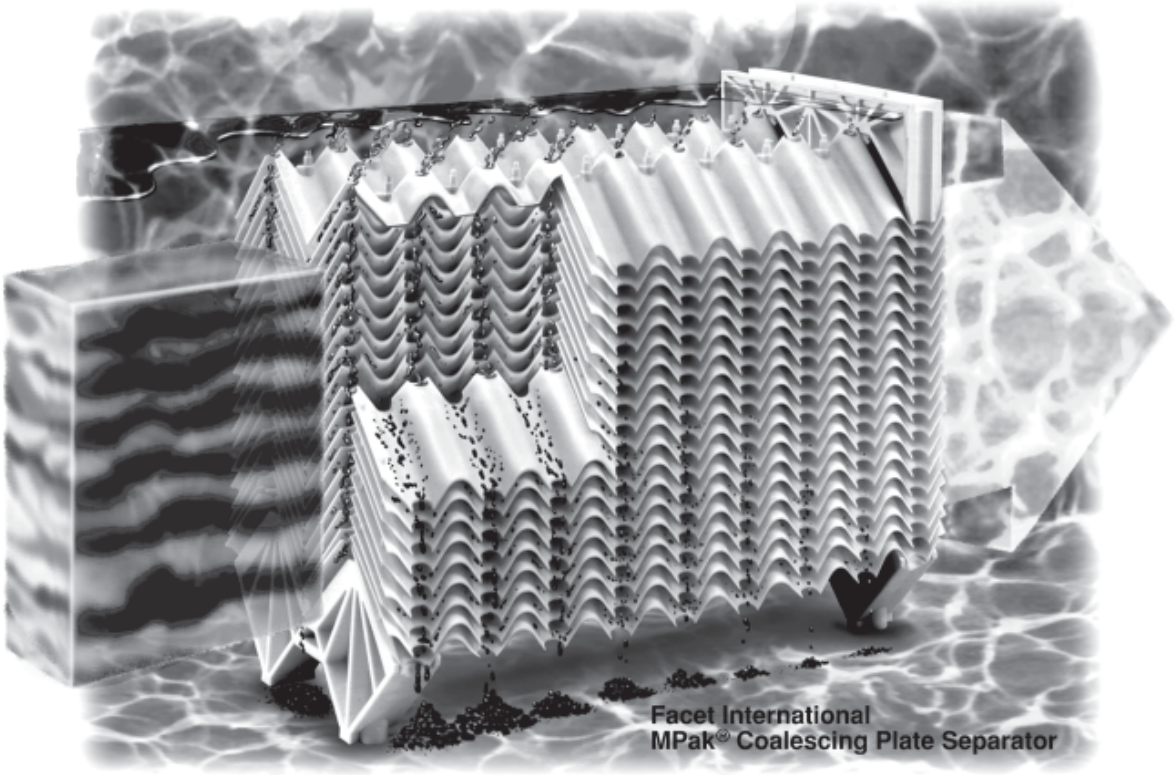

Internal Configuration

Steel Tank Institute

Sample Configuration

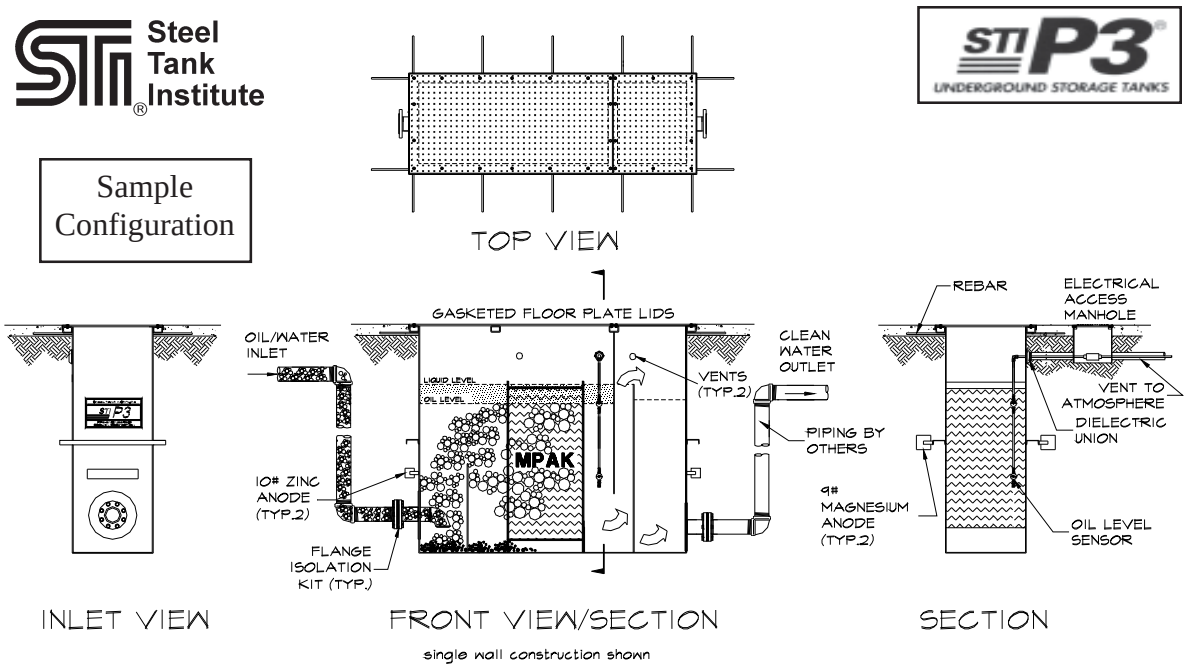

The Anchorage Tank & Welding, Inc. LLS Series oil water separator is for underground installation in the floor slab of a building, either a single or double wall configuration.

The LLS Series separator is a sti-P3® tank. The unit carries the sti-P3® corrosion control system, the sti-P3® label, and a 30 year limited warranty. Liquid level sensors and an electrical access manhole are also provided.

A cross sectional flow schematic and basic shop drawings of *your* separator are included with this manual. These drawings reveal the internal configuration that includes an inlet pipe, pre-separation chamber, MPak® coalescing plates, oil dam and exit pipe.

The oil/water mixture enters the separator through an inlet pipe than turns up toward the top of the tank so that the incoming fluid momentum can be dissipated. Oil already separated in this upward moving liquid will rise directly to the top of the tank, and the remainder of the mixture will flow into the coalescing plates.

As the oil/water mixture passes horizontally through the plates, the oil droplets rise to meet the bottom of the plate above them, where they are collected. From this point the oil droplets merge to form larger droplets what will rise through the holes located at the peaks. The oil droplets will continue to rise to the top of the separator to form an oil layer which can be removed periodically from the separator by means of a vacuum truck or portable skimming device. Frequency of oil removal from the separator will depend upon the amount of oil entering the unit.

Most of the solids drop to the bottom of the pre-separation chamber. Some additional solids enter the plate packs and are separated there. Solid particles that are captured by the plate packs fall to the bottom of the plate area through holes in the valleys of the plates. Space has been provided under the plate packs for these solids.
The processed water flows out of the coalescing chamber, under the oil dam, and through the outlet pipe into the plumbing (sanitary or storm drain) system.

Safety

a) Normal fire prevention measures and safety precautions must be exercised in areas where free hydrocarbon products exist.

b) Care shall be taken in keeping the area cleansed as oil/water mixtures can produce slick areas and hazardous footing for personnel.

System Installation

Flow into the separator should not exceed the recommended flow rate for your particular application. The maximum allowable flow rate may be found on the *Plate Pack Analysis* provided with this manual. The tank must be vented to the atmosphere. The flow through the separator is normally gravity flow.

The separator tank should be level to within 1/16" per foot.

It is recommended that the water effluent pipe (in addition to the inlet pipe) be gravity flow. The outlet pipe must be arranged so as to be free flowing. If the outlet pipe is too small or has a high pressure drop, water will back up into the separator, causing problems. External piping should be supported separately with back fill, not supported from the separator.

To install the separator, follow these steps:

1) Since your system is an underground model, refer to the STI-P3® installation instructions included herein. *Note: To minimize maintenance intervals it is recommended that a grit trap be installed upstream of the separator.*

2) Connect the oil/water inlet piping to the separator inlet connection.

3) Connect vent plumbing.

4) Connect the water outlet piping to the water outlet connection.

5) Install wiring and control panel for level sensors and tank leak sensor. Detailed instruc tions are included in this manual.

6) Place grade ring manholes or optional cus tom manhole. The skirts of these manholes (or any other metallic objects) must not come in contact with the tank, as the Steel Tank Institute warranty will be void.

System Operation

Initial Start-Up

The following procedure shall be followed after the installation of the separator or after the separator has been drained or pumped out, and is ready to be restarted. This procedure assumes that the separator is delivered with plate packs installed. If the plates are to be field installed, follow the procedure provided in the Maintenance section below.

1) Ensure there are no obstructions in the inlet or water outlet pipes.

2) Remove covers to reveal tank interior.

3) Fill the tank with clean water (to avoid contaminating the separator outlet area with oil) until it flows through the outlet pipe.

4) After 15 minutes of run time, take a sample of the effluent for testing, if required.

5) The liquid level in the separator will drop an inch or two when the flow is reduced or shut off. This is due to normal back pressure in the unit.

6) Replace covers

It is recommended that the separator be closely monitored during the first several weeks of operation.

Normal Operation

During normal operation the separated oil will rise to the surface and displace the water. Eventually, the oil level will be thick enough that it will reach the designated level sensor which will send a signal to the control panel indicating that it is time to pump out the contained oil. A second level switch, located lower in the tank, will send another signal that means the separator has reached a very high level of oil holding capacity and *needs to be pumped out soon*. Ignoring this signal could result in oil being released from the tank.

Maintenance

Note: When hosing your facility floor and equipment, use only recommended degreasers such as AMEROID OWS Quick Separating Degreaser. Commercial soaps and detergents will cause unbreakable emulsifications in the separator, causing the separator to cease functioning.

1) After the initial 1000 hours of operation, the separator tank should be inspected and cleaned out if necessary as follows:

a) Remove covers.
b) Remove water from the tank. Plate

packs may be cleaned in place with the Magic Wand (See Section 5.5). However, if it is determined that the plate packs must be removed, then proceed.

c) Locate the pull-out cords on the coalescing plate pack(s), and with a fork-lift (or other equipment) lift straight up and out of the unit.

d) Hose down the tank interior and sweep or vacuum all sediment out of the inlet and coalescing chambers.

e) Examine tank interior for damage to internal coating. Contact Anchorage Tank & Welding, Inc. for touch-up paint.

f) Replace plate pack(s) in the reverse order of removal, item c.

g) To restart, follow the steps in Initial Start-Up.

Note: The quantity of sludge found in the tank should be used as a basis for determining the next interval before cleaning. If sludge is impinging on the plate pack(s), then the maintenance schedule should be shortened, otherwise, it can be lengthened.

2) Should it become necessary to clean the plate pack(s), lift the plate pack assembly as detailed in Maintenance 1),c), however, do not remove the assembly from the tank. Lift the assembly to a point where the plate pack(s) are accessible to clean.

The Facet MPak® plates are designed to be cleaned in place using a special cleaning wand (Facet part number 60517464) and city water pressure. The wand has a connection just like an ordinary garden hose and is equipped with a small conical strainer in the connection so that solids in the inlet water will not clog the cleaning holes. (See drawing number 6051764) The plate pack(s) can also be cleaned using a 1½" fire hose at 10-15 PSI or a standard garden hose at normal house pressure (30-35 PSI). In a similar manner, steam can also be used to flush the plate pack(s).

Re-installation of Plate Packs

Note:

DO NOT disassemble the plate pack assembly.

The coalescing plates do not need to be cleaned until they are white. A thin coating of oil does not deteriorate the performance.

Caution should be taken that the cleaning process does not result in a pollution problem.

Replace plates in reverse order of removal, please note the following:

a) The plate pack(s) are designed to fit snuggly within its housing.

b) Install plate pack assemblies one at a time.

c) Be sure that the plate pack assembly is resting on its seat.

d) Check to see that no possibility of fluid by-passing can occur around the plates and sidewalls of the tank, as well as between plate pack assemblies, since this could deteriorate the efficiency of the separator.

e) Replace the retaining angles, if applicable.

f) Restart the separator as outlined in section Initial Start-Up.

Cleaning the Plate Packs

Facet International MPak™ oil water separator plate packs are self-cleaning, but even self-cleaning packs can become clogged with solids under adverse conditions. For this reason, they are designed so that they can be cleaned in place to remove accumulations of solid particles.

Plate type separators that are provided in large modules must be lifted out of the separator by a crane when contaminated with dirt. This is inconvenient and expensive, and it is possible to damage the packs during removal or reinstallation.

Facet MPak™ plates are designed to be cleaned in place using a special cleaning wand (Facet part number 6051764) and city water pressure. The wand has a connection just like an ordinary garden hose and is equipped with a small conial strainer in the connection so that solids in the Facet MPak® plates may either be cleaned in place or removed and cleaned. To clean the packs, first stop the flow to the unit, remove the oil, and drain the water.

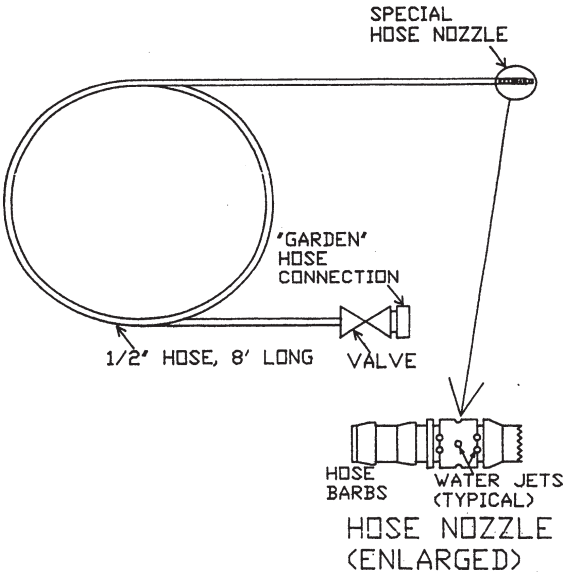

For cleaning in place, connect a pressure water hose (at least 60 psig) to the special cleaning wand. Provide a vacuum truck or other means of disposing the sludge and dirt in the tank. Turn on the water to provide a spray from the wand andinsert the tip of the wand slowly into each hole of the plate pack, starting at the upstream end. As the water flushes the dirt out of the plate packs, it should be removed by the vacuum hose or directed to an oily water sewer if one is available.

For cleaning outside the tank, remove plate packs and other internals. Flush with hose and cleaning wand to an oily water drain.

CAUTION: The spray wand produces a vigorous spray. Operators should wear waterproof clothing and goggles or face mask.

Troubleshooting

TROUBLE	POSSIBLE CAUSE	DIAGNOSTIC TECHNIQUE	CORRECTIVE ACTION
PROCESSED WATER HAS OIL IN IT	FLOW TOO GREAT FOR APPLICATION	CHECK FLOW	SLOW THE FLOW RATE
	LEAKAGE AROUND OIL DAM	REMOVE COVER AND INSPECT	SLOW THE FLOW RATE
	PLATES BLOCKED	REMOVE PLATES AND INSPECT	CLEAN AND REASSEMBLE
TANK IS OVERFLOWING	OUTPUT LINE RESTRICTED	CHECK FLOW	REMOVE RESTRICTION

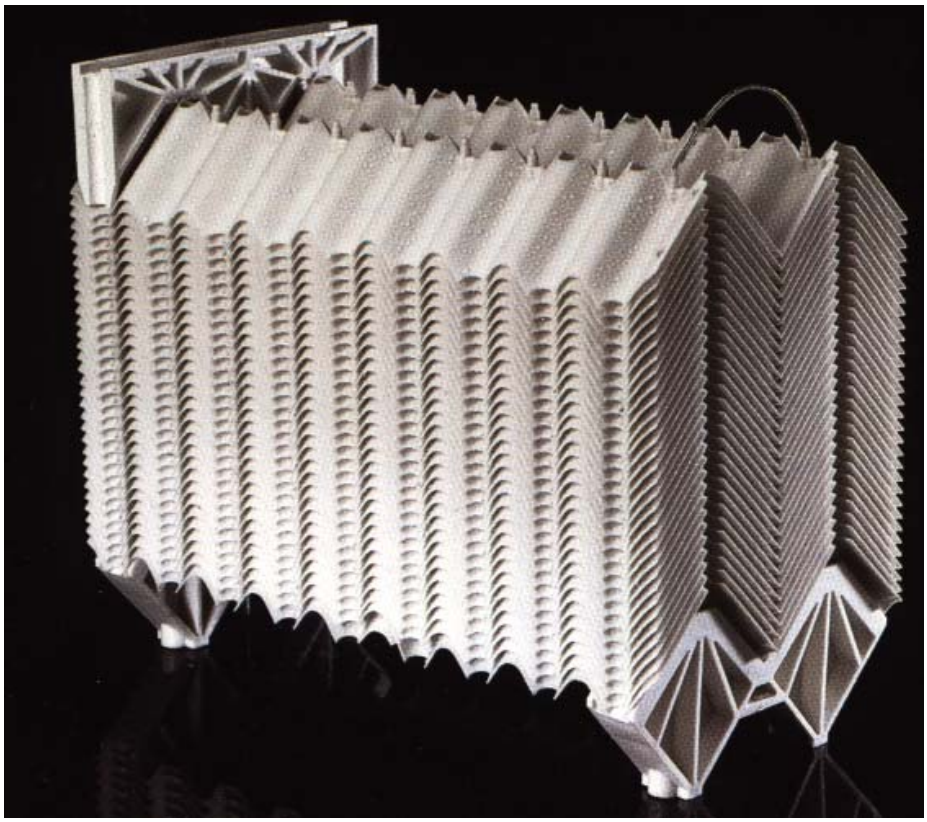

Anchorage Tank & Welding, Inc.
Oil Water Separator
Tank Monitor II

Front Cover Layout

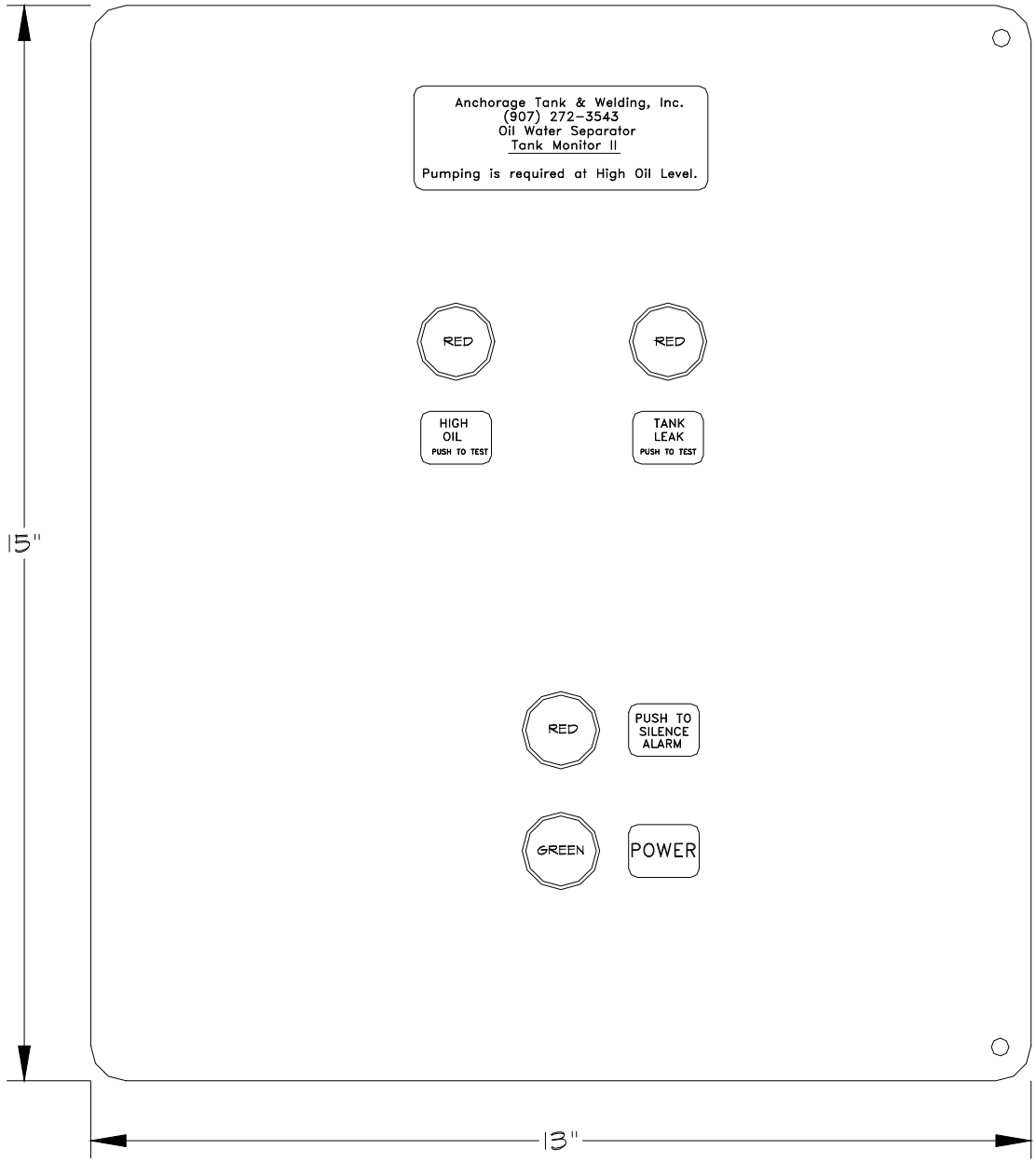

Nema 4X Fiberglass Enclosure
UL Listed 508

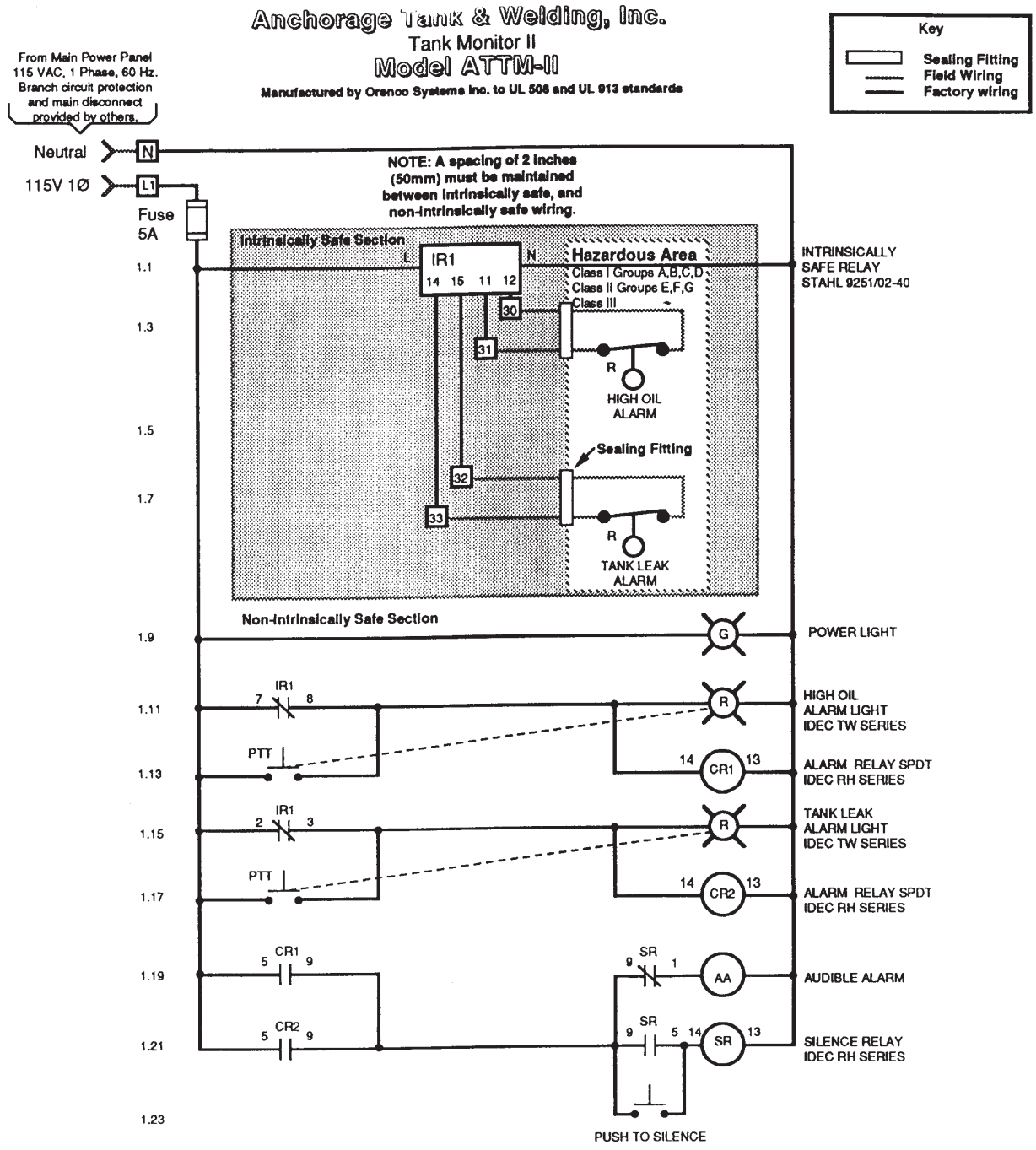
Anchorage Tank & Welding, Inc.
Tank Monitor II
Model ATTM-II
Manufactured by Orenco Systems Inc. to UL 508 and UL 913 standards
Key
Sealing Fitting
Field Wiring
Factory wiring
From Main Power Panel
115 VAC, 1 Phase, 60 Hz.
Branch circuit protection
and main disconnect
provided by others.
Neutral
115V 1Ø
N
L1
Fuse
5A
NOTE: A spacing of 2 inches
(50mm) must be maintained
between intrinsically safe, and
non-intrinsically safe wiring.
Intrinsically Safe Section
IR1
L
N
14 15 11 12
Hazardous Area
Class I Groups A,B,C,D
Class II Groups E,F,G
Class III
30
31
32
33
R
HIGH OIL
ALARM
Sealing Fitting
TANK LEAK
ALARM
INTRINSICALLY
SAFE RELAY
STAHL 9251/02-40
Non-Intrinsically Safe Section
1.1
1.3
1.5
1.7
1.9
1.11
1.13
1.15
1.17
1.19
1.21
1.23
G
POWER LIGHT
IR1
7
8
PTT
R
HIGH OIL
ALARM LIGHT
IDEC TW SERIES
14
CR1
13
ALARM RELAY SPDT
IDEC RH SERIES
IR1
2
3
PTT
R
TANK LEAK
ALARM LIGHT
IDEC TW SERIES
14
CR2
13
ALARM RELAY SPDT
IDEC RH SERIES
CR1
5
9
SR
9
1
AA
AUDIBLE ALARM
CR2
5
9
SR
9
5
14
SR
13
SILENCE RELAY
IDEC RH SERIES
PUSH TO SILENCE

Panel Installation Instructions

Stahl Intrinsically Safe Controls

Before Installing Panel

1. *Read all instructions before proceeding with the installation. Improper installation may void warranties.*

2. Inspect your order for completeness and inspect each component for shipping damage. If something is missing or damaged, you will need to contact Anchorage Tank to obtain replacements.

3. Check to be sure the instructions and items supplied comply with state and local regulations.

4. A qualified electrician must be employed to install and service the panel and ancillary wiring. The equipment must be installed in compliance with the National Electric Code, state and local codes. Intrinsically safe wiring and explosion proof fittings must be installed according to NEC sections 500-516. The control panel uses Stahl intrinsically safe sensors. Please refer to the Stahl Installation guide for notes on installing the circuits.

Placement of the Control Panel

5. Install the electrical control or alarm panel within view of the tank. The panel should be attached to a post, or to a wall. Panels that contain motor contractors should not be mounted on an exterior wall unless the mounting method includes sound deadening. Very hot or cold temperatures can cause variations in the performance of the electrical components. Locate the panel at a convenient height (usually about 5 feet above the ground) and where it is accessible for maintenance. *Note: Panel must be situated in a nonhazardous area, where there is no chance that an explosive atmosphere will exist at any time.*

Making the Connections

6. Install the electrical junction box for the liquid level and tank leak senors wiring just outside the separator, under the access manhole provided.

7. The level sensors should be shipped already installed in your separator. Run the remaining wires to the junction box. Adequate lengths of wire should be left within the junction box to allow for easy removal for future disconnecting and re-splicing.

8. Run the wires from the control panel to the junction box. The wires can be brought through a conduit, or direct buried using suitable direct-burial wire. The conduit that enters the junction box must be sealed with a conduit seal. A conduit seal should be used even if the wires are direct-buried, to prevent infiltration of water into the junction box. The number of wires depends on the control panel, and the number of level sensors used. This can be determined by consulting the wiring diagram.

Note: these wires will be connected to an intrinsically safe circuit. Under no circumstances should intrinsically safe wiring be run in the same conduit of mixed in the junction box unless they are separated by a distance of 2 inches and secured.

9. All splices made in the junction box should be done using waterproof wire nuts or butt connectors and heat shrink tubing. *The splices **must** be waterproof.* Splices that are not waterproof may cause a malfunction of the controls if water should leak into the junction box.

Panel Installation Instructions continued

Connect the Control Panel

10. Connect the wires coming from the level sensors to the intrinsically safe terminals in the control panel. Please refer to the Tank Monitor III wiring diagram found in this manual, as well as inside the front cover of the control panel for the correct terminal locations.

11. Connect the incoming power to the panel. Power to the panel must be appropriate to the control panel. Insure that the panel is properly grounded, and that the fuse or breaker and wire size for the mail power panel are sized correctly. Note: the voltage for the controls in the panel is always 120VAC.

12. Use 60 degree CU conductors only. Torque the terminal blocks to 7.1 LB-IN. Torque the circuit breaker and ground lugs to 45 LB-IN.

13. When power is applied to the control panel, the wires to the level sensors may be energized. Do not service the level sensors in the oil water separator without disconnecting the power at the circuit breaker(s) and the fuse. The oil water separator is a hazardous area and may contain explosive gases. Take appropriate precautions before working in the oil water separator.

14. Once the control panel and pump are installed and wired, the system should be tested.

15. If you have any questions, please contact Orenco Systems, Inc.

GEMS

General Operating Principle

GEMS Level Switches operate on a direct, simple principle. In most models, a float encircling a stationary stem is equipped with powerful, permanent magnets. As the float rises or lowers with liquid level, the magnetic field generated from within the float actuates a hermetically sealed, magnetic reed switch mounted within the stem. The stem is made of non-magnetic metals or rugged, engineered plastics. When mounted vertically, this basic design provides a consistent accuracy of ±1/8 inch. Multi-station versions use a separate reed switch for each level point being monitored.

Side-mounted units use different actuation methods because of their horizontal attitude. The basic principle, however, is the same: as a direct result of rising or falling liquid, a magnetic field is moved into the proximity of a reed switch, causing its actuation.

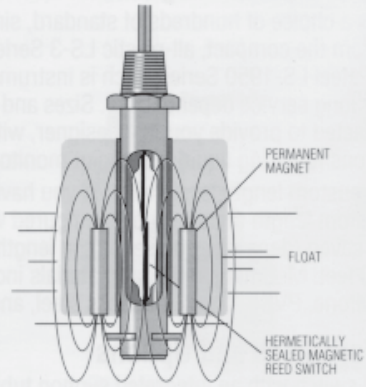

Reed Switch Reliability

The durable construction of these reed switch designs ensures long, trouble-free service. Because the effects of shock, wear and vibration are minimized, these hermetically sealed switches provide precise repeatability with no more than 1% deviation. The switch actuation points remain constant over the life of the unit. See "Reed Switch Protection" in the Appendix section for information on extending the life of GEMS Level Switches.

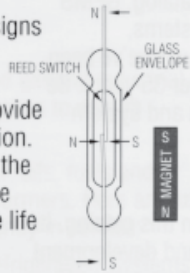

Liquid Interface Monitoring

In addition to monitoring the surface level of liquids, many GEMS Level Switches can be used to sense the interface point between dissimilar liquids sharing the same tank. Monitoring water condensation in fuel storage tanks, and separating chemical emulsions in process systems are two typical application examples. Multi-station level switches can be configured to monitor this interface point in addition to high and low liquid levels. Contact GEMS Sensors Division with your specific application.

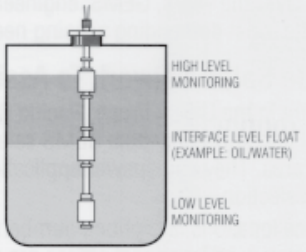

Installation and Maintenance

A standard NPT female boss in tank top, bottom or side is all that is required for rapid installation. Units operate normally in any attitude - from the vertical to a 30° inclination - with lead wires up or down. Standard IPS pipe extends units to any intermediate level in the tank.

Details and tips for installation and maintenance of GEMS Level Switches are found in the Appendix section of this catalog.

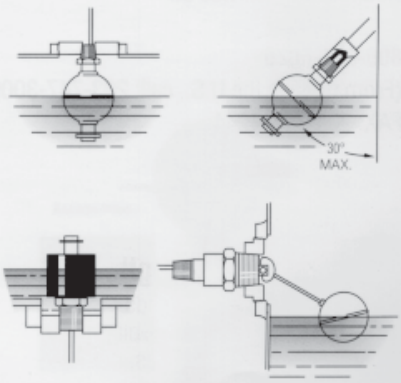

Electrical Data

Standard reed switches in GEMS level switch units are hermetically-sealed, magnetically actuated, make-and-break type. Switches are SPST or SPDT, and rated 20 VA. See the chart below for maximum load characteristics of GEMS level switches.

GEMS Sensors Division would be pleased to run life tests on our level switches with your specific load, and issue a report indicating the approximate number of cycles that can be expected.

U.L. Recognized Units: Switches showing a U.L. listing are rated for IO VA, 20 VA, or 50 VA as shown below.

Typical Wiring Diagrams

SPST, Normally Open - Dry

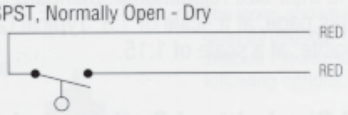

SPST, Normally Closed - Dry

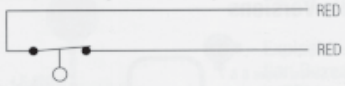

SPDT, Shown Dry

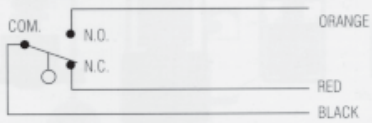

Switch Rating – Maximum Resistive Load

VA	Volts	Amps AC	Amps DC
10 General Use	0-50	.2	.13
	120	.08	N.A.
	100	N.A.	.3
20 Pilot Duty	0-30	.4	.3
	120	.17	.13
	240	.08	.06
50 General Use	0-50	0.5	0.5
	120	.4	.4
	240	.2	.2
100*	120	.8**	N.A.
	240	.4	N.A.

* Level switch units with 100 VA switches are not U.L. Recognized.
** Limited to 50,000 operations.

FABRI-LEVEL™ Kits

FABRI-LEVEL Switch Kits contain all components for complete assembly of a 1- or 2-station level switch unit for pipe-plug mounting in your tank. Kits are available in several material and size combinations. N.O. or N.C. operation of the SPST switch is selectable by inverting the float(s) on the unit stem. Two 10" (254 mm) lengths of tube are furnished to space level stations as desired. Components available for custom-building other configurations are listed on the facing page and above.

Specifications

Kits use the components listed individually on the facing page and above. Please review for performance and dimensional data.

How to Order

Specify Kit Number and quantity.

Materials		Mounting NPT	Kit Number
Fittings	Floats		
Brass	Buna N	1-1/4"	26128
		2"	24576
316 Stainless Steel	Buna N	1-1/4"	26130
		2"	26675
316 Stainless Steel		2"	24577

Each Kit Contains:

1 Tube Connector
1 Mounting Plug
2 Level Stations (Switch, Tube, Float)
2 Extension Tubes
1 Tube End Fitting
3 Tube Unions

Large Size – Metallic

LS-800 Series

- Stainless Steel or Brass Mountings
- 1 to 6 Actuation Levels
- Lengths to over 11 feet
- U.L. Recognized, CSA Listed

Rugged construction and multiple options provide the LS-800 Series with exceptional versatility. Longer and more substantial than other metallic models, the LS-800 is capable of supporting larger, more buoyant floats, and is physically stronger for better reliability in contaminated or turbulent media. This series offers SPST or SPDT switches, and a choice of mountings, floats and materials that can be configured for a wide range of applications in water, oils, chemicals and corrosive liquids.

Temperature Sensing

To save space and simplify wiring GEMS can incorporate a temperature sensor in the end of the float stem on any model type LS-800. Two sensor types are available: Transducers for continuous output, and Thermostats for switch actuation. See Page 42 for details.

Adjustable Mounting

Allows stem to travel up and down for fine tuning your actuation points. See Page 32 for details.

Junction Boxes

Simplify wiring with optional terminal strip J-boxes. Feraloy versions are explosion-proof (Some FM Approved) and water tight. See Page 43 for details.

Mounting Types

Each mounting type can be configured with stem lengths (L_0) and float material indicated in the table below. Mountings are also continued on following page.

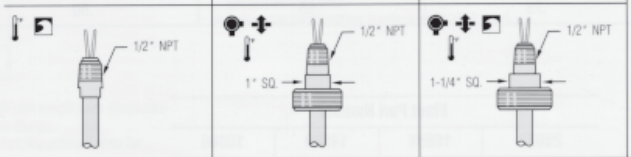

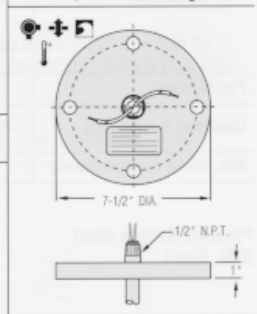

	Type 1 1/2" NPT	Type 2 1-1/4" NPT	Type 3 2" NPT	Type 4 3", 150# Dia. Flange
Stem and Mounting Material	Brass or 316 Stainless Steel			Flange: Carbon Steel or 316 S.S. Stem: 316 S.S.
Max Length (Lo)	36" (91.4 cm)	60" (152.4 cm)	140" (355.6 cm)	
Mounting Position	Vertical ± 30° Inclination			
Float Stops**	Brass Units: Beryllium Copper Grip Rings; Stainless Steel Units: S.S. ARMCO PH-15-7MO Grip Rings			

** Units greater than 72" overall length are supplied with collars with setscrews (made of same material as stem and mounting) in place of float-stop rings. Collars are optional on units less than 72" overall length. Units requiring 316 SS float stops must be special ordered with 316 SS collars instead of grip rings.

GEMS

LS-800 Series - continued

Mounting Types – continued

Type 5 External Mounting units are ideal for tanks with limited access to tops or bottoms.

Type 5 External Mount

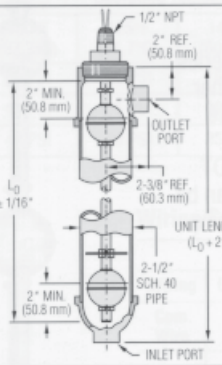

Housing Material	Brass	316 Stainless Steel
Stem and Mounting	Brass	316 Stainless Steel
Port Sizes	3/4" NPT	1" NPT
Max. Length (Lo)	140" (355.6 cm)	
Float Stops**	Beryllium Copper	S.S. ARMCO PH-15-7 MO

** Units greater than 72" overall length are supplied with collars with setscrews (made of same material as stem and mounting) in place of float-stop rings. Collars are optional on units less than 72" overall length. Units requiring 316 SS float stops must be special ordered with 316 SS collars instead of grip rings.

LS-800-A Series Adjustable Mounting

Available for LS-800 Series Mounting Types 2, 3 and 4.

Special cinch-nut on mounting allows stem to travel up or down for fine tuning the actuation points. The extent of adjustment depends on unit length and distance from mounting to highest float stop. When ordering, specify "LS-800-A" as Series Type.

Note: Maximum overall length is limited to 72" with this option.

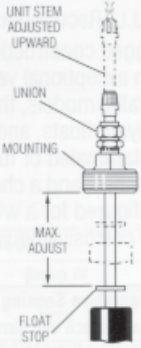

Float Types

A single float type is selected for use at all actuation points.

Float Material	**Buna N**		**316 Stainless Steel**	
Compatible Mounting Types	2	1, 3, 4, 5	1, 3, 4, 5 (Units ≤72")	3, 4, 5 (Units >72")
Float Dimensions	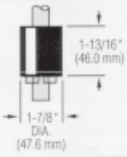	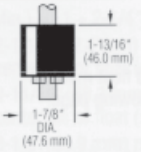	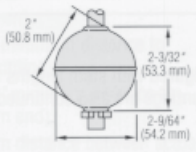	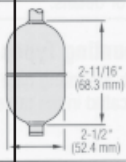
Part Number	**26032**	**10558**	**14569**	**15666**
Operating Temperature	Water: to 180°F (82.2°C) Oil: -40°F to +230°F (-40°C to +110°C)		-40°F to +300°F (-40°C to +148.9°C)	
Min. Media Specific Gravity	.75	.55	.80	.75

Pressure Ratings Chart (PSI, Max.)

			Float Part Number			
			26032	**10558**	**14569**	**15666**
Mounting Type	**1, 2, 3**		150		750	300
	4		150			
	5	**Brass**	100 @ +70°F (21.1°C)			
		316 S.S.	150		750	300

Service Tips

Should you encounter any operational problems with a GEMS level switch, consult the chart below for the most common causes and solutions. GEMS takes every possible precaution to assure every unit is shipped in proper working order. If, after reviewing this chart and your installation procedures, your GEMS level switch does not perform properly, please contact the factory for assistance.

Suspected Switch Trouble	Probable Cause	Things to Check	Solution
Intermittent Switch	Corroded or loose connection	Poor electrical connection	Fix connection
	Moisture in switch	Resistance on meg ohm scale	Repair at factory
	Grip rings/collars out of location	Measure overtravel – 1/16" to 3/16"	Repair at factory
Contacts Will Not Close	Corroded or loose connection	Poor electrical connection	Fix connection
	Float not magnetized	Float magnetics	Repair at factory
	Grip rings/collars out of location	Measure overtravel 1/16" to 3/16"	Repair at factory
	Mis-wired	Electrical circuit wiring and power at switch	Correct wiring
	Contacts fused open	In-rush VA rating and sealed VA rating of the load or shorted load	Repair at factory; correct load problem
Contacts Sticking (Does Not Always Open)	Carbonization of contacts	In-rush VA and sealed rating of the load	Repair at factory; correct load problem
	Moisture in switch	Resistance on meg ohm scale	Repair at factory
	Contaminated media is binding float	Inspect float	Clean unit and/or use larger float
Contacts Will Not Open	Moisture in switch	Resistance on meg ohm scale	Repair at factory
	Grip rings/collars out of location	Measure overtravel 1/16" to 3/16"	Repair at factory
	Contacts fused closed	In-rush VA and sealed VA rating of the load or shorted load	Repair at factory; correct load problem

Madison Chemical Industries Inc.
490 McGeachie Dr. Milton ON L9T 3Y5
Tel: (905) 878-8863 Fax: (905) 878-1449

CORROCOTE II CLASSIC

TECHNICAL DATA — **HYDROCARBON MODIFIED PROTECTIVE COATINGS**

THE PRODUCT AND ITS USES

Corrocote II Classic is a tough, durable, two component, hydrocarbon extended polyurethane coating which has been protecting steel and concrete structures since 1975. This one coat primerless system offers excellent resistance to corrosive environments (subterranean and marine, for example), soil stress and cathodic disbondment. When applied with a 1:1 spray gun assembly, Corrocote II Classic sets almost instantly at any ambient temperature to form an enamel-like sheet of plastic bonded tenaciously to the substrate being protected. A slow set version is also available for those who prefer to use a brush, roller or single component spray gun.

Two out of every three cathodically protected underground steel fuel storage tanks buried today in North America use Corrocote II Classic. Corrocote II Classic is approved by Underwriters' Laboratories, the Steel Tank Institute and Underwriters Laboratories of Canada for this purpose. The system is also used to protect structural steel, oil/water separators, wastewater tanks, digesters, power transmission poles and virtually any structure subject to corrosion.

TECHNICAL INFORMATION

PROPERTY	TEST DESCRIPTION	RESULTS
• Application Temperatures	N/A	+65°C/150°F to -40°C/-40°F
• Initial Setting Time	@ 70°F/20°C	5 min. (Fast Set); 60-90 min. (Slow Set)
• Curing Time Before Handling	@ 70°F/20°C	10 min. (Fast Set); 2-3 hours (Slow Set)
• Ultimate Cure	@ 70°F/20°C	2 to 5 days
• Recoat Time	@ 70°F/20°C	1 hour (Fast Set); 6-8 hours (Slow Set)
• Solids Content	Conversion to solids by volume	100%
• Volatile Organic Compounds (VOCs)		0%
• Theoretical coverage	N/A	1605 mil ft^2 / US gal per mil; $39m^2$ / litre @ 25 microns
• Adhesion (to Steel)	Elcometer (SSPC-SP5)	+1500 p.s.i.
• Hardness	ASTM D-2240	70 shore "D"
• Flexibility	ASTM D-412	180° over 1" mandril
• Abrasion Resistance	ASTM D-4060 (Taber CS-17)	80 mg @ 1 kg per 1000 cycles
• Permeability	ASTM E-963 (@ 15 mils)	0.002 perm inches
• CD Resistance	ASTM G8-72 (STP, 28 days)	Excellent (10 mm radius)
	ASTM G8-72 @ 65°C, 28 days)	Excellent (20 mm radius)
• Chemical Resistance	ASTM D-543	see Chemical Resistance Chart
• Dielectric Strength	Vols/Mil	>200 volts/mil
• Surface Resistivity	N/A	$1x10^{14}$ chms per cm^2
• Water Absorption	ASTM D0471	<3% (no absorption below surface
• Impact Resistance	Gardiner Impact Tester	40 in. lbs
• Ultraviolet Resistance	Q.U.V.	will chalk and darken but not break down
• Service Temperature	ASTM D-870, D-2485	-40°C/-40°F to 90°C/195°F
• Color Availability		Black, Mid-Brown

APPLICATION INSTRUCTIONS

FOR DETAILED INSTRUCTIONS ON APPLICATION OF COATINGS, CONTACT YOUR MADISON REPRESENTATIVE.

A. SURFACE PREPARATION

1) Ensure that surface is clean, dry and uncontaminated. Do not proceed if temperature is near dew point or relative humidity exceeds 85%.
2) Blast with sand or steel grit, using an angular medium to a Near White Blast (SSPC-SP10; NACE 2; SA 2.5 standards) with a minimum 2.5 mil (75 microns) profile.

B. APPLICATION OF COATING

1) Roll or agitate individual components thoroughly before use to disperse pigments and assure homogeneity. Do not thin. Do not mix "A" and "B" together.
2) Spray apply coating using a two component, 1:1 mix ratio, heated airless spray unit.
3) Unlimited film build can be obtained in a single coat, multi-pass application. Typical applied thickness is 12 - 15 mils (300 - 375 microns).
4) A second coat may be applied over the first if it is applied within the recoat time; otherwise roughening of surface will be necessary to ensure good intercoat adhesion.
5) Slow set version may be premixed and applied by conventional means to a maximum thickness of 15 to 20 mils. Pot life is approximately 30 minutes.

C. CLEAN-UP AND STORAGE

1) Corrocote II Classic will react with humidity and moisture. Keep containers tightly sealed; store upside down. For clean-up, use Madison VR-1 Viscosity Reducer, M.E.K. or a 50:50 blend of M.E.K. and Xylol. Other solvents may react with Corrocote II Classic.
2) Store between 50°F (10°C) and 80°F (27°C). DO NOT FREEZE. Use product within 6 months of receiving.

HEALTH AND SAFETY

Corrocote II Classic is intended for industrial use only. It contains no monomeric isocyanate but may nevertheless cause respiratory distress in some people. Provide ample ventilation. Wear a fresh air respirator when using in confined areas or when spraying. If swallowed, do NOT induce vomiting as this will cause additional throat irritation; contact physician. If splashed on skin, remove immediately with rubbing alcohol and then wash with soap and water. If splashed in eyes, wash liberally with clean water and contact physician; temporary irritation of eyes may last several days. Does not contain coal tar and none of its ingredients are know to cause cancer in humans but treat unreacted product as a possible carcinogen. Applicators should wear rubber gloves, safety goggles and protective clothing. Resins are inert when cured. See MSDS for more information.

LIMITED TWO YEAR WARRANTY

Madison will replace any product which, in service for which it is suitable, fails to meet specifications within two years of sale and which is proven to be defective when applied in a professional manner according to instructions. Madison accepts no responsibility or liability for consequential damage, injury or expense in contract or negligence. This product replacement warranty is in lieu of any other right, warranty, guarantee or condition, statutory or otherwise, expressed or implied. whether as to fitness for a particular purpose or as to merchantable quality or otherwise.

The information contained herein is believed to be accurate as of the date of publication. Madison reserves the right to change product specifications without notice.

March 1995

Electrical Grade Access Cover

UNIVERSAL

MULTI-PURPOSE MANHOLES

60

MULTI-PURPOSE ROUND MANHOLE - Used for a wide variety of service station, commercial and industrial applications.

Model #	Size	Weight (lbs.)	Height	Width
60-8075	8" x 7½"	11.4	9¼"	8¼"
60-1280	12" x 8"	25.0	7½"	13⅞"
60-1212	12" x 12"	27.0	13"	13⅞"

- Cast iron ring and cover
- 18 gauge galvanized steel skirt
- Convenient "finger-grip", for easy cover removal
- Carries the H-20 load rating

Steel Tank Institute

R821-97

CATHODICALLY PROTECTED UNDERGROUND STORAGE TANKS

STI P3

INSTALLATION INSTRUCTIONS

March 1997

1.0 EXCAVATION AND BEDDING

1.1 The excavation shall be free from any hard or sharp material that may cause damage to the tank coating. (Care shall be taken during installation that foreign matter is not introduced into the excavation or backfill.)

1.2 Bedding and backfill shall be homogeneous material consisting of clean sand, pea gravel, No. 8 crushed stone (No. 8 coarse aggregate per ASTM-D448, fi inch maximum size) or equivalent.

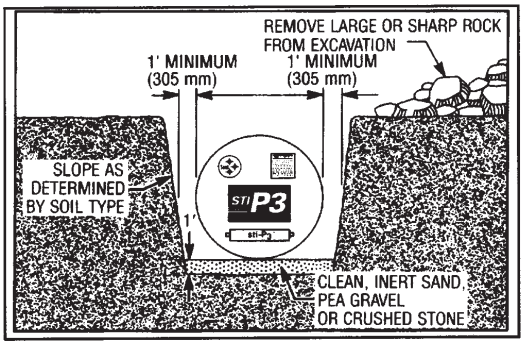

1.3 The bottom of the excavation shall be covered with a minimum of 12 inches of bedding (305mm), suitably graded and leveled. The excavation shall extend at least one foot (305mm) around the perimeter of the tank and anodes.

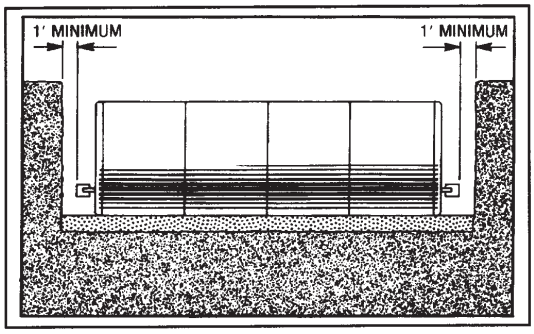

1.4 Where anchoring by means of a concrete pad is required, the tank shall not be placed directly on the pad. A layer of bedding material at least 6 inches (152mm) deep must be spread evenly over the dimensions of the pad to separate the tank from the pad. The tank shall not be placed on any hard or sharp material.

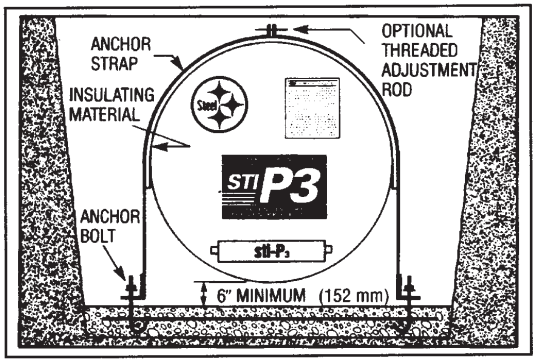

1.5 In a tidal area, the tank "bedding" material shall be crushed stone or pea gravel. Sand backfill may be used only if measures are taken to prevent washout of sand and prevent the infiltration of native soil into the backfill during the design life of the system.

2.0 AIR TEST AT JOB SITE

2.1 Temporary plugs and thread protectors installed by the manufacturer shall be removed. Apply compatible, non-hardening pipe sealant to internal bushing threads. Permanent metal plugs shall be installed at all unused openings.

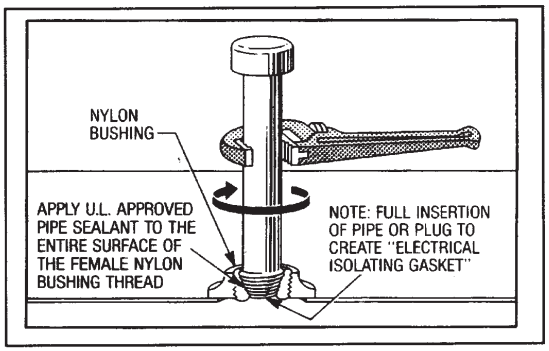

2.2 The nylon bushings in STI-P3® tanks shall not be removed from the unused openings. Plugs used to temporarily seal the tank for the above ground air test, but later removed for pipe installation, shall not be over tightened. Do not cross thread or damage the nylon bushings when replacing plugs or installing required tank piping.

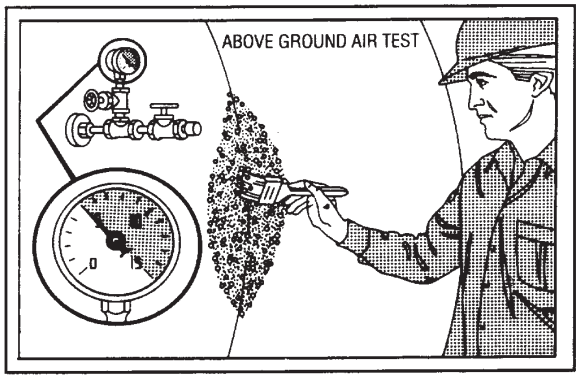

2.3 Test pressure shall be maintained at, without exceeding, 5 psig (34.47 kpa) while a soap solution is applied to the area of pipe connections and welds.

2.4 Dual wall tanks shall require different air pressure testing procedures. Do not connect a high pressure air line directly to the interstitial monitoring port. A factory applied vacuum within the interstitial space can be used in lieu of, or in addition to, the air test procedure. Consult tank fabricator for air test recommendations. Do not apply a vacuum to the primary tank or a single wall tank. PEI/RP 100-94 also provides guidelines.

2.5 Take necessary safety precautions during air tests. Do not leave tanks unattended. Avoid standing at the head of the tank, especially while applying air pressure. Use an air-pressure relief valve.

3.0 COATING INSPECTION

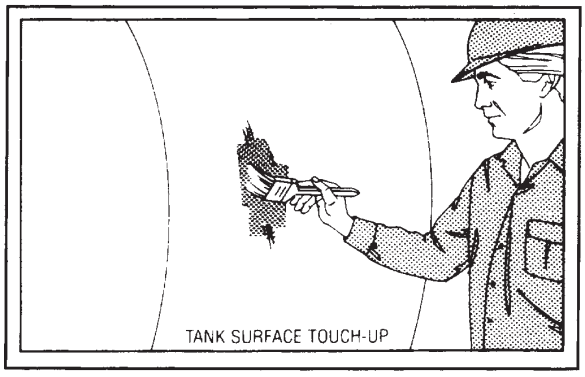

3.1 Before placing the tank in the excavation, all dirt clods and similar foreign matter shall be cleaned from the tank, and areas of coating damage shall be repaired with a touch-up coating kit provided.

3.2 Clean damaged coating areas through removal of surface rust, dirt, contaminants and disbonded coating prior to application of touch-up coating (see SSPC SP-2 "Hand Tool Cleaning" or SP-3 "Power Tool Cleaning" for additional guidance).

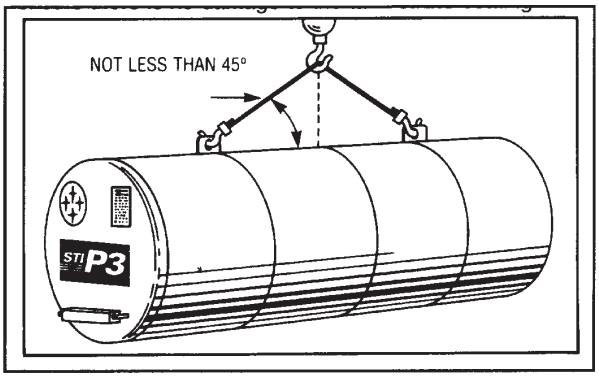

4.0 TANK HANDLING

4.1 Controlled off-loading of the tank from the delivery truck shall be allowed.

4.2 Equipment to lift the tank shall be of adequate size to lift and lower the tank without dragging or dropping to ensure there is no damage to the tank or the coating.

4.3 Tanks shall be carefully lifted and lowered by use of cables or chains of adequate length attached to the lifting lugs provided. A spreader bar shall be used where necessary. Under no circumstances shall chains or slings be used around the tank shell.

5.0 ANODE INTEGRITY

5.1 STI-P3® tanks may be equipped with either zinc or magnesium anodes. Whereas magnesium anodes are designed only for installation in soil resistivities of 2000 ohms-cm or greater, zinc anodes are effective in all soil resistivities.

5.2 After an STI-P3® tank has been placed in the excavation, if anode is connected by a lead wire, attachment to the tank shall be checked to assure this connection has not been damaged. Where damaged, the connection must be re-established in strict accordance with this specification.

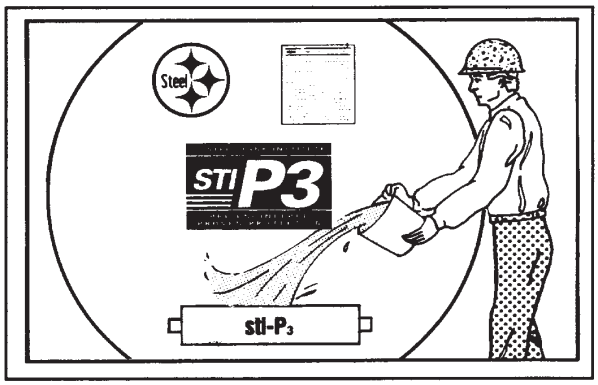

5.3 *To assure immediate operation of cathodic protection system, each anode shall be thoroughly saturated with water at time of backfill operations.*

6.0 ANCHORING

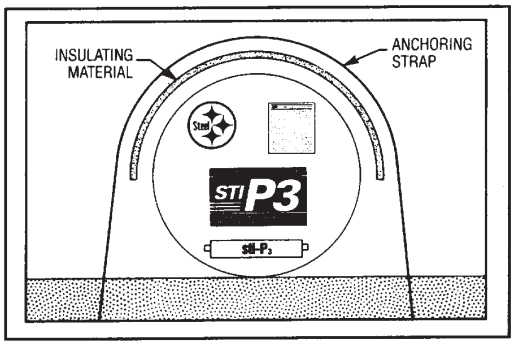

6.1 High water tables or partially flooded excavation sites exert significant buoyant forces on tanks. Buoyant forces are partially resisted by the weight of the tank, the backfill and the pavement atop the tank. Additional buoyant restraint, when required, shall be obtained by using properly designed hold-down straps in conjunction with concrete hold-down slabs or deadman anchors. The use of steel cable and/or round bar as hold-down straps on the tank is prohibited.

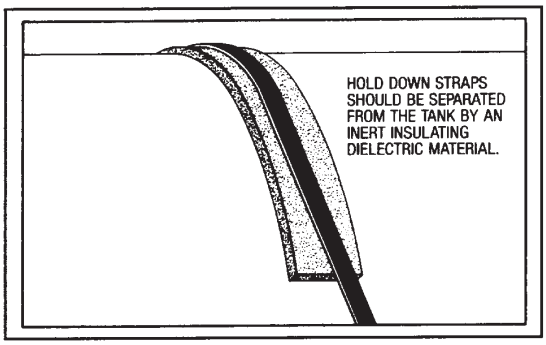

6.2 Installers of hold down straps shall ensure that the straps are separated from the tank by a pad made of inert insulating di-electric material. The separating pad shall be wider than the hold-down straps, which will prevent direct contact between the straps and the tank shell.

7.0 BACKFILLING

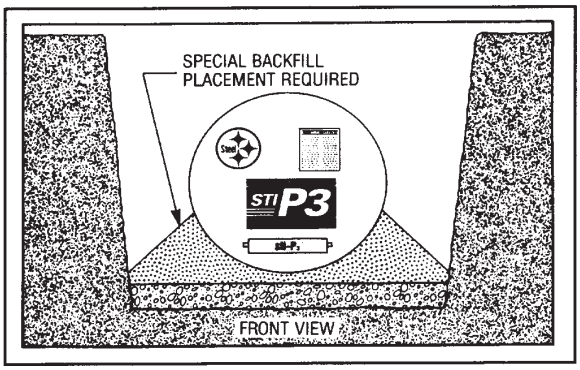

7.1 Homogeneous backfill similar to bedding material shall be placed carefully around the entire tank to create a uniform homogeneous environment. Avoid damage to coating especially where tamping is required.

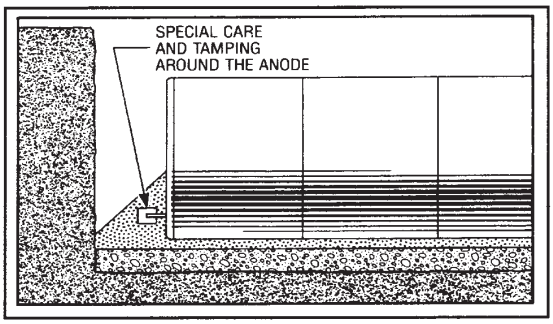

7.2 Installing and tamping backfill along the bottom sides of the tank shall ensure that the tank is fully and evenly supported around the bottom quadrant.

7.3 Prior to backfilling to top of tank, all openings shall be visually inspected to assure that the STI-P3® nylon bushings remain in place. Where flanged openings have been used, isolation of the flange gaskets shall be confirmed with a continuity tester. No current shall pass through the factory installed flange gaskets. Isolation of the fittings is required to assure tank integrity.

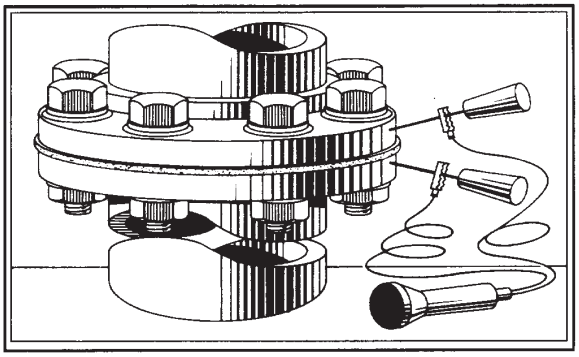

7.4 If the tank is to be installed in the presence of an impressed current cathodic protection system, consult "Impressed Current Warranty Addendum for sti-P3", for additional instructions.

8.0 FINAL AIR TEST

8.1 Install required tank piping using compatible non-hardening sealant, taking care not to cross thread or damage the non-metallic bushings. Torque of 400 to 1,000 ft-lbs (542.3 to 1355.8 nm) may be required to fully insert pipe.

8.2 Where air or hydrostatic testing is required after installation, the pressure applied shall not be in excess of 5 pounds per-square-inch (34.7 kpa) as measured at the top of the tank. A soap solution shall be applied around pipe connectors while air test is being performed.

9.0 TANK MONITORING SYSTEM INSTALLATION

9.1 Each tank shall have a cathodic protection monitoring station (PP4®, PP2®, PP1®, or other) installed in such a way so that there will be at least a tank structure lead easily accessible and identifiable at the finish grade and provide easy placement of a reference electrode during monitoring.

9.2 If your tank is equipped with a Protection Prover 4® (PP4®), remove the unit from the shipping carton and inspect for damage. (See the separate manufacturers' installation instructions for specific details.)

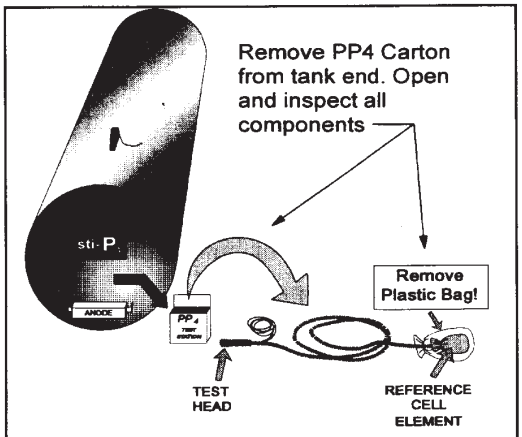

Note: Remove plastic outer bag on reference cell element on the same day it is to be installed. DO NOT remove or cut inner Filter Fabric bag.

9.3 Prior to installation of the PP4®, remove the plastic bag from the reference cell element. After the tanks have been placed in the excavation, position the reference cell element midway from front to back between two tanks so that it is covered by 6 inches (152mm) of moist bedding material.

9.4 Drape the flexible pipe up to the top of the tank and temporarily secure the pipe to prevent damage during backfill operations. Backfill the excavation until the tanks are almost covered.

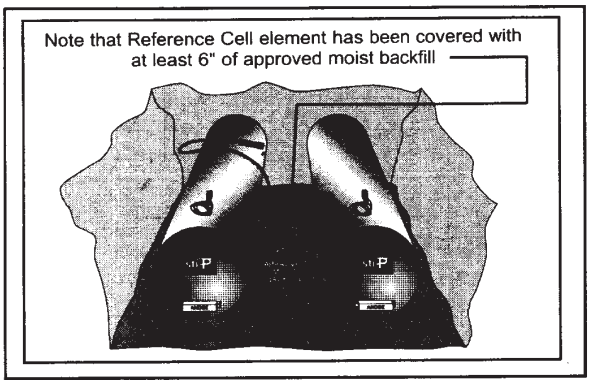

9.5 Locate the PP4® test head in its approximate final position and support with a wooden stake or other similar device. Connect the appropriate tank test wire from the reference cell element to the black test lead already installed on the tank using the hardware supplied or by performing a field splice.

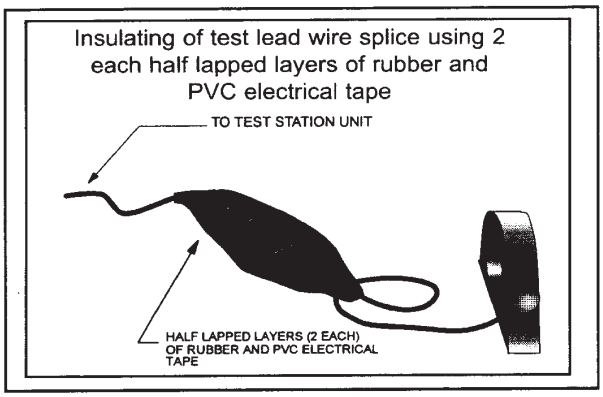

9.6 Assure that the wire connection is strong by simultaneously placing tension on the wire at either side of the connection point. Protect the wire connection from corrosion using the material supplied with the PP4®or by wrapping the connection in half lapped layers of rubber and PVC electrical tape.

9.7 The test head shall be placed in a small grade manhole to protect it from vehicular traffic or set directly in the concrete covering for the excavation. During pouring of the at-grade slab protect the metal contact points on the test head from being covered by concrete.

9.8 If your tank is equipped with a Protection Prover 2® (PP2®), prior to completion of the backfill, the monitoring terminal located near the top of the tank must be positioned as follows:

9.8.1 Select a terminal location on a pipe near grade that will be accessible through a grade manhole upon completion of installation.

9.8.2 Loosen the black nylon pipe lashing by releasing the locking tab. Uncoil enough lead wire from the tank mounting lug to reach the terminal location with an additional 4 feet (1.2m) of slack.

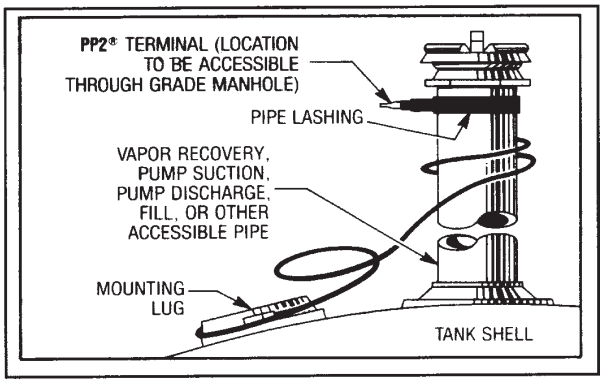

9.8.3 Secure the PP2® terminal to the pipe by tightening the black nylon pipe lashing. The lead wire terminations shall remain sealed.

9.8.4 Route wire to avoid strain or breakage during backfill. Do not cover PP2® terminal with backfill material.

9.9 If the tank is equipped with a Protection Prover 1 (PP1®) monitoring system, which includes a monitoring test station mounted at the end of the tank, prior to any backfilling, extend the monitoring system to 4 inches (102mm) below grade level without pulling it out of the mounting bracket. The PP1® test station shall be protected by a grade manhole of 7fi inches (191mm) minimum diameter.

10.0 ELECTRICAL CONTINUITY TEST

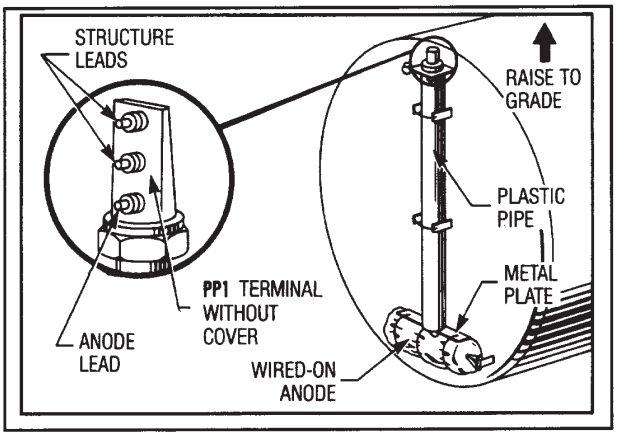

10.1 Contact between the steel tank and all other structures such as external and internal piping, pumps, valves, gauge and monitoring equipment, and grounding systems, will nullify the cathodic protection design. Prior to backfill, a simple continuity test between the tank lead wire and each connected system will verify the electrical isolation. Continuity shall not be present. After backfill, continuity can be checked with a high impedance voltmeter by fixing a copper/copper sulfate reference cell in the soil and contacting all structures with the other voltmeter lead wire. Do not move the reference cell. Potential differences between the tank to soil and all other structures to soil must exceed 10 millivolts to verify electrical isolation.

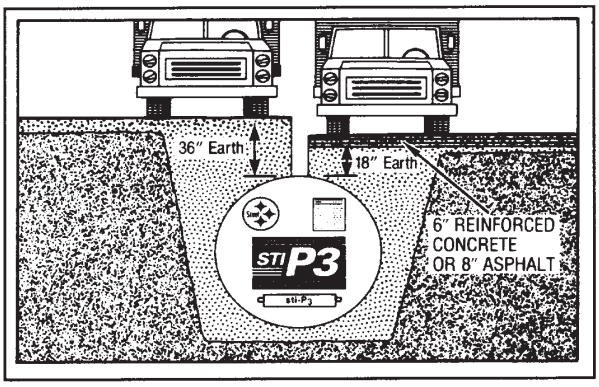

11.0 FINAL BACKFILL

11.1 Homogeneous backfill shall be deposited carefully around the tank and to a depth of at least one foot (305mm) over the tank. (See NFPA 30 and state or local codes for a minimum depth of cover required).

12.0 POST-INSTALLATION CATHODIC PROTECTION MONITORING

12.1 All tanks must be monitored to assure proper installation and ensuing cathodic protection of the tank. Before pouring concrete or asphalt pad atop tank, a tank to soil potential reading with a high impedance voltmeter and copper/copper sulfate reference electrode must be taken. Reference electrode shall be placed in moist soil directly above the tank. A minimum reading of -850 millivolts should be obtained to indicate that the tank anodes are activated. **Record reading on installer information card and other permanent files.**

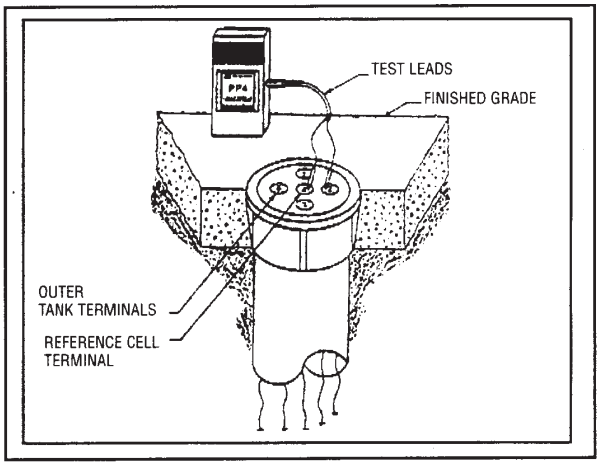

12.2 If the tank is connected to a PP4® test station, the cathodic protection can be easily verified using a high impedance digital volt-meter. Touch the meter probes to the appropriate test head terminals as shown in the diagram above. As stated in 12.1, a minimum reading of -850 millivolts should be obtained.

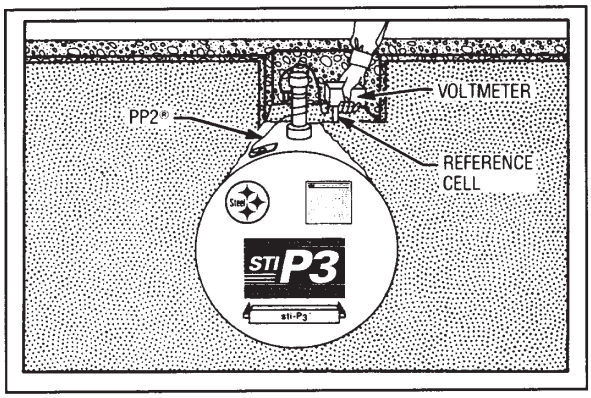

13.0 PERIODIC CATHODIC PROTECTION MONITORING

13.1 Single wall STI-P3® tanks shall be tested for cathodic protection at installation and then in 3 year intervals for the life of the installation. STI-P3® tanks which might otherwise be classified as ACT-100® composite tanks, due to factory attachment of anodes, do not require additional testing. Follow applicable local, state, and federal regulations for any additional requirements. Reference NACE RP-0285 for more specifics on protection criteria.

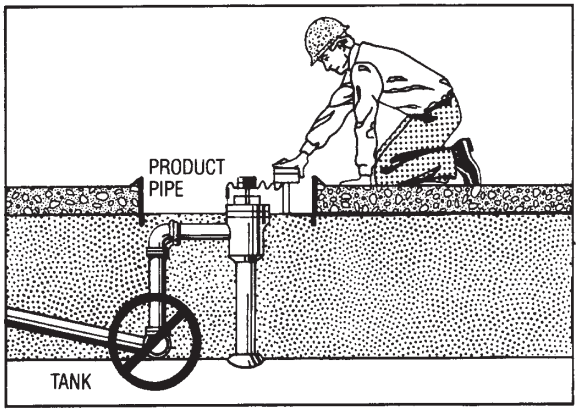

NOTE: Cathodic protection effectiveness of sti-P_3® tanks will be impacted by contact with other metal structures including piping.

Some of the specifications and recommended practices referenced in this publication have been contributed by the industry organizations listed below:

- Petroleum Equipment Institute (PEI)
  Recommended Practices for Installation of Underground Liquid Storage Systems PEI/RP 100-94
- American Petroleum Institute (API)
  Installation of Underground Petroleum Storage Systems API/RP 1615 (1996)
- National Fire Protection Association (NFPA)
  Flammable and Combustible Liquids Code NFPA 30 - 1996
- International Fire Code Institute
  Uniform Fire Code
- National Association of Corrosion Engineers
  Control of External Corrosion on Metallic Buried, Partially Buried, or Submerged Liquid Storage Systems NACE RP-02-85
- Steel Structures Painting Council
  Surface Preparation Specification No.2 "Hand Tool Cleaning" (SP-2) and No. 3 "Power Tool Cleaning" (SP-3)

Disclaimer

Except as specifically provided in the STI-P3® Limited Warranty, there are no other warranties, express or implied, including, but not limited to, any implied warranties of merchantability or fitness for a particular purpose. In no event shall STI, STI Licensess, STA, STICO or any subsidiaries thereof be liable for loss of profits, indirect, incidental, special, consequential or other similar damages.

Steel Tank Institute
R821-97

CATHODICALLY PROTECTED STEEL UNDERGROUND STORAGE TANKS

STI P3®

INSTALLATION CHECKLIST

Owner of Tank: _____ STI-P3® Label No. _____

Location of Tank: _____ Date: _____

_____

Check( )

Handling

The handling equipment is of adequate size and capacity to lift and lower the tank without dragging or dropping. ____

The repair of all damaged coating areas such as scratches and holidays has been made with compatible coating. ____

Plastic wrap has been removed from the weld-on zinc anode. ____

Excavation

The site has been excavated deep enough to enable 1 foot of compacted clean sand or gravel to act as bedding material between native soil and tank when anchoring is not required. ____

Burial depths meet minimum code requirements (such as NFPA 30). ____

Testing

The tank has been air-tested at 5 PSIG while applying soap solution onto weld seams and fittings to check for leaks. ____

- or a vacuum test has been performed in accordance with the fabricator's instructions. ____

All local and state testing requirements have been performed. ____

Anchoring (check one)

Not applicable to this site. ____

Deadman anchors used. ____

Concrete pad. ____

Soil and pavement overburden will hold down tank (ref. PEI/RP 100-90). ____

When anchoring with a concrete hold down pad, a minimum 6" layer a pea gravel, compacted clean sand or #8 crushed stone has been spread evenly over the concrete pad dimensions to separate tank from pad. ____

When deadman anchors or hold down pads are used, hold down straps have been separated from the tank by an inert insulating dielectric material at least 1" wider than the steel hold down straps. ____

Tank is electrically isolated from the hold down strap. ____

Backfill

Homogenous backfill consisting of clean sand, pea gravel or #8 crushed stone has been used. ____

Backfill has been placed along sides of tank to ensure full support along the tank's bottom quadrant. ____

Pipe Connections

Electrical isolation of flanged connections has been verified with a continuity tester. ____

Prior to backfilling over tank top, but after piping to the tank, electrical isolation of tank from all equipment has been verified. No continuity shall be present. ____

Tank Monitoring

The cathodic protection monitoring station has been installed and brought to grade and access to the soil above the tank has been provided. ____

Verify operation of the cathodic protection system by: A tank to soil potential reading obtained with a high impedance voltmeter and a copper/copper sulfate reference electrode installed with the tank or placed immediately above the tank in soil.

Record reading: - _____ millivolts

The tank owner has received the above info. ____

All other facets of tank installation have been made in accordance with STI-P3® instructions. ____

_____

Signature and Title of Installing Foreman and /or Project Engineer

_____

_____

_____

Installing Contractor

Steel Tank Institute
570 Oakwood
Lake Zurich, IL 60047
Ph: 847-438-8265
fax: 847-438-8766
www.steeltank.com

Note: This checklist includes certain key steps in the proper installation of the STI-P3® tank and is intended only as an aid to tank installers who are knowledgeable and experienced in underground tank installation. Compliance herewith does not necessarily meet the requirements of all applicable federal, state, and local laws, regulations and ordinances concerning tank installation.